Eclipse Solar Suitcase

Renogy 100W | 200W

RENOGY

THE FUTURE OF CLEAN ENERGY

2775 E. Philadelphia St., Ontario, CA 91761
1-800-330-8678

Version 1.0

⚠ Important Safety Instructions ⚠

Please save these instructions.

This manual contains important safety, installation, and operating instructions for the charge controller. The following symbols are used throughout the manual to indicate potentially dangerous conditions or important safety information.

⚠ **WARNING: Indicates a potentially dangerous condition. Use extreme caution when performing this task.**

CAUTION: Indicates a critical procedure for safe and proper operation of the controller

NOTE: Indicates a procedure or function that is important to the safe and proper operation of the controller.

General Safety Information

- Read all of the instructions and cautions in the manual before beginning the installation.
- There are no serviceable parts for this controller. Do **NOT** disassemble or attempt to repair the controller.
- Do **NOT** allow water to enter the controller.
- Make sure all connections going into and from the controller are tight.

Battery Safety

- Use only sealed lead-acid, flooded, or gel batteries which must be deep cycle.
- Explosive battery gases may be present while charging. Be certain there is enough ventilation to release the gases.
- Be careful when working with large lead acid batteries. Wear eye protection and have fresh water available in case there is contact with the battery acid.
- Carefully read battery manuals before operation.
- Do **NOT** let the positive (+) and negative (-) terminals of the battery touch each other.
- Recycle battery when it is replaced.
- Over-charging and excessive gas precipitation may damage the battery plates and activate material shedding on them. Too high of an equalizing charge or too long of one may cause damage. Please carefully review the specific requirements of the battery used in the system.
- Equalization is carried out only for non-sealed / vented/ flooded / wet cell lead acid batteries.
- Do **NOT** equalize sealed / VRLA type AGM / Gel cell batteries **UNLESS** permitted by battery manufacturer.

Table of Contents

General Information

The Renogy **Eclipse Solar Suitcase** combine highly efficient monocrystalline solar panels with a 30A Adventurer charge controller to create an easy-to-use, 'plug and play' system.

This system is specifically designed for mobile off-grid applications, where space and weight limitations are abundant. The Solar Suitcase models support 12V deep cycle battery varieties such as sealed-lead acid, gel, and flooded. With built-in tilting stands, these panels can be adjusted at different angles to maximize the power output throughout the seasons.

The alligator clips included in this package make it easy to connect the panel to a battery in seconds. If one ever needs to connect a battery with a different type of end terminal, the alligator clips are attached via MC4 Connectors.

Key Features

- Easy to read LCD displaying solar charge information
- Sealed, Gel, and Flooded battery option.
- 4 Stage charging: Bulk, Boost. Float, and Equalization
- Temperature compensation and correcting the charging and discharging parameters automatically, improving battery lifetime.
- Protection against: overcharging, over-discharging, overload, short-circuit, and reverse polarity.
- Negative ground controller.
- Tilting stand for maximum solar generating potential.
- Convenient storage case for easy transportation.

PWM Technology

The Adventurer utilizes Pulse Width Modulation (PWM) technology for battery charging. Battery charging is a current based process so controlling the current will control the battery voltage. For the most accurate return of capacity, and for the prevention of excessive gassing pressure, the battery is required to be controlled by specified voltage regulation set points for Absorption, Float, and Equalization charging stages. The charge controller uses automatic duty cycle conversion, creating pulses of current to charge the battery. The duty cycle is proportional to the difference between the sensed battery voltage and the specified voltage regulation set point. Once the battery reached the specified voltage range, pulse current charging mode allows the battery to react and allows for an acceptable rate of charge for the battery level.

Four Charging Stages

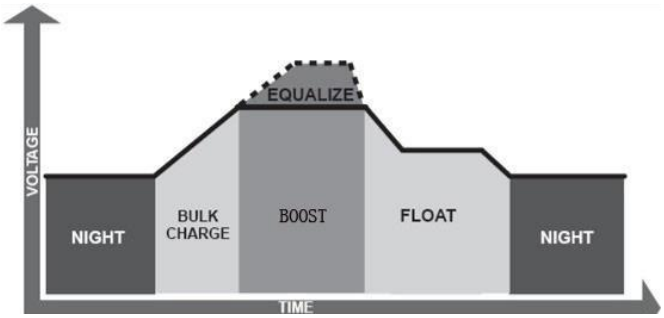

The Adventurer charge controller has a 4-stage battery charging algorithm for a rapid, efficient, and safe battery charging. They include: Bulk Charge, Boost Charge, Float Charge, and Equalization.

Bulk Charge: This algorithm is used for day to day charging. It uses 100% of available solar power to recharge the battery and is equivalent to constant current.

Boost Charge: When the battery has charged to the Boost voltage set-point, it undergoes an absorption stage which is equivalent to constant voltage regulation to prevent heating and excessive gassing in the battery. The default time for this is 120 minutes for the Adventurer

Float Charge: After Boost Charge, the controller will reduce the battery voltage to a float voltage set point. Once the battery is fully charged, there will be no more chemical reactions and all the charge current would turn into heat or gas. Because of this, the charge controller will reduce the voltage charge to smaller quantity, while lightly charging the battery. The purpose for this is to offset the power consumption while maintaining a full battery storage capacity. In the event that a load drawn from the battery exceeds the charge current, the controller will no longer be able to maintain the battery to a Float set point and the controller will end the float charge stage and refer back to bulk charging.

Equalization: Is carried out every 28 days of the month. It is intentional overcharging of the battery for a controlled period of time. Certain types of batteries benefit from periodic equalizing charge, which can stir the electrolyte, balance battery voltage and complete chemical reaction. Equalizing charge increases the battery voltage, higher than the standard complement voltage, which gasifies the battery electrolyte.

WARNING: **Once equalization is active in the battery charging, it will not exit this stage unless there is adequate charging current from the solar panel. There should be NO load on the batteries when in equalization charging stage.**

WARNING: **Over-charging and excessive gas precipitation may damage the battery plates and activate material shedding on them. Too high of equalizing charge or for too long may cause damage. Please carefully review the specific requirements of the battery used in the system.**

WARNING: **Equalization may increase battery voltage to a level damaging to sensitive DC loads. Ensure that all load allowable input voltages are greater than the equalizing charging set point volta**

Included Components

Remote Temperature Sensor
Measures the temperature at the battery and uses this data for very accurate temperature compensation. The sensor is supplied with a 6.6ft cable length that connects to the charge controller.

Battery Voltage Sensor
Measures battery voltage accurately. The voltage detected at the battery terminals on the controller may differ from the real battery voltage due to the connection and cable resistance. Therefore, this sensor, though not required, is recommended for best performance

MC4 to Alligator Clips w/ Fuse
Used for connecting charge controller to battery

Identification of Parts

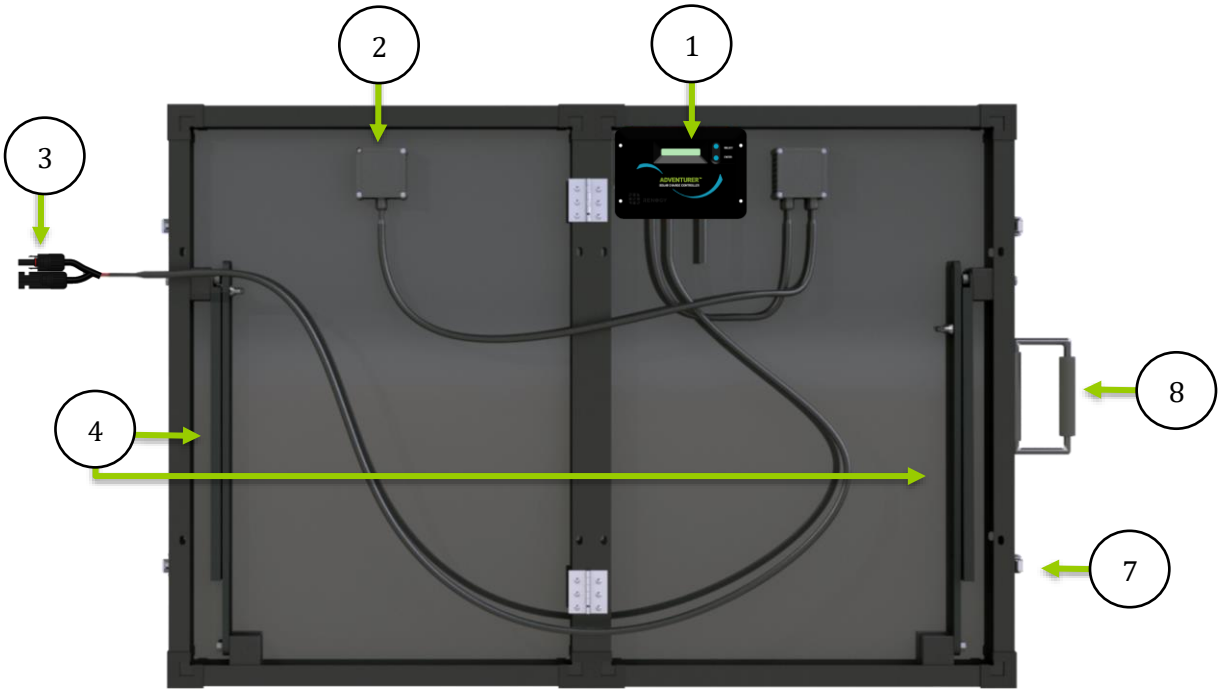

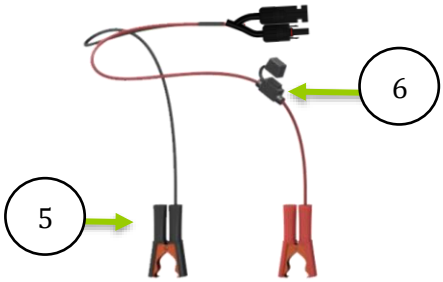

Key Parts

1. **30A Adventurer Charge Controller**
2. **Junction Box**
3. **MC4 Connectors**
4. **Tilt Stands**
5. **Battery Alligator Clips**
6. **In-line fuse**
7. **Latch**
8. **Handle**
9. **Case (Not pictured)**

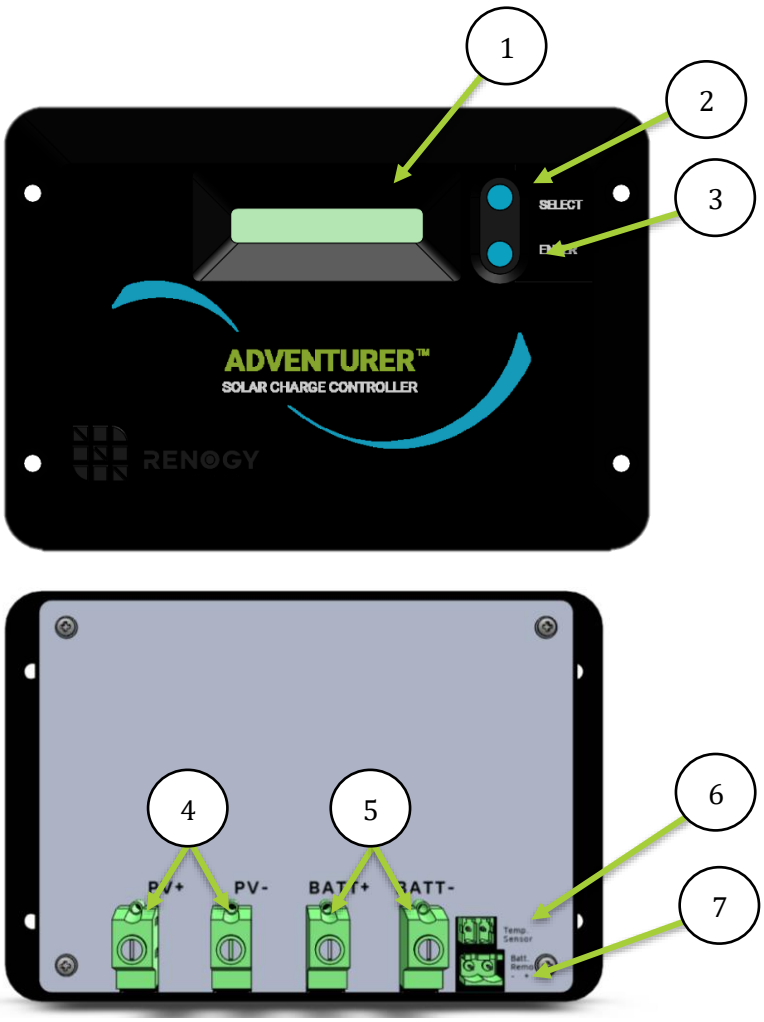

Key Parts

1. **Liquid Crystal Display (LCD)**
2. **Select Button**
3. **Enter Button**
4. **PV terminals**
5. **Battery Terminals**
6. **Remote Temperature Sensor Terminal (optional accessory)**
7. **Remote Battery Voltage Sensor Terminal (optional accessory)**

Installation

1. **Unlatch and unfold unit then connect MC4 Connectors**

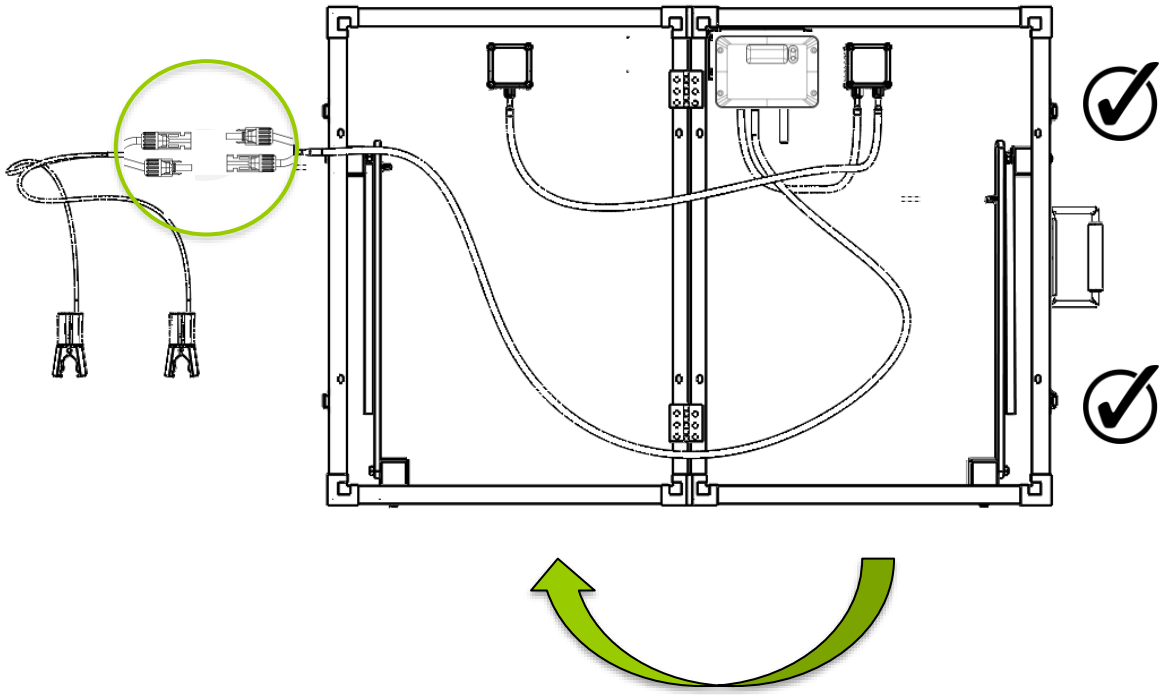

2. **Connect Battery Alligator Clips to 12V Battery**

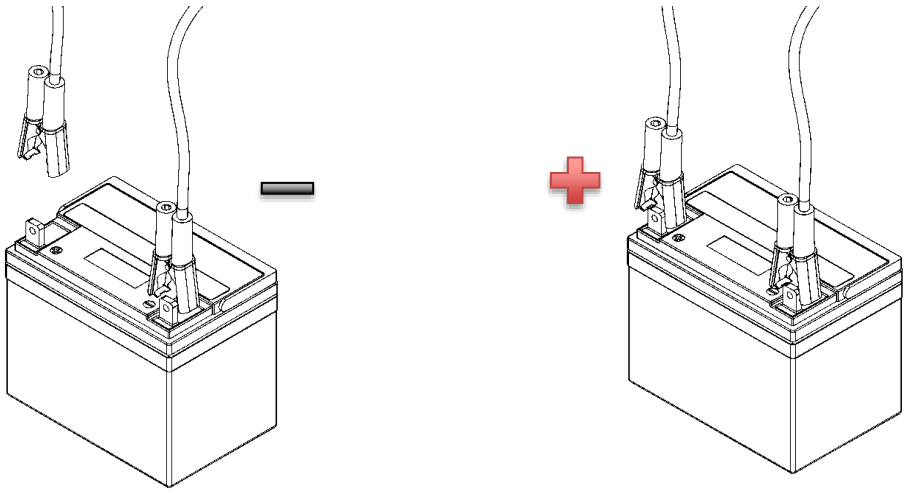

3. **Unscrew butterfly nut tilt to desired angle and lock butterfly nut**

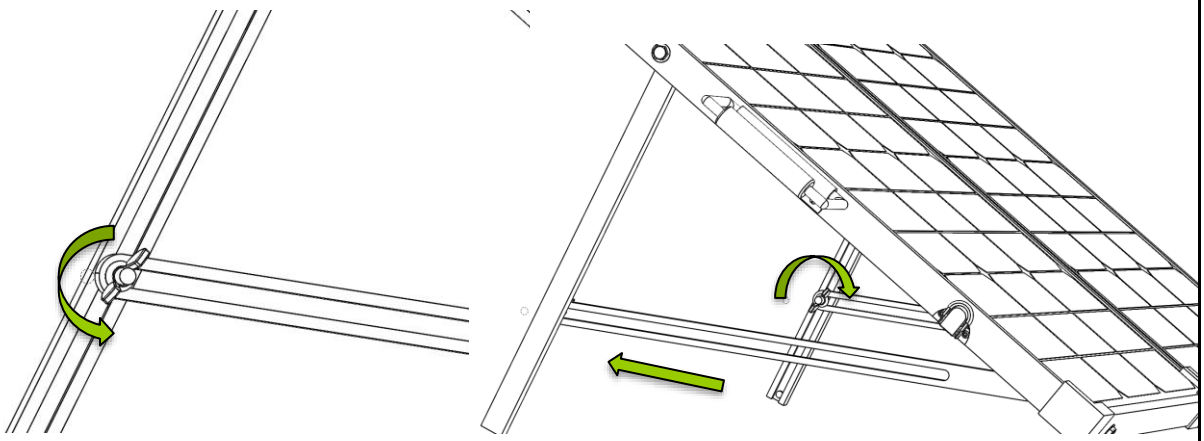

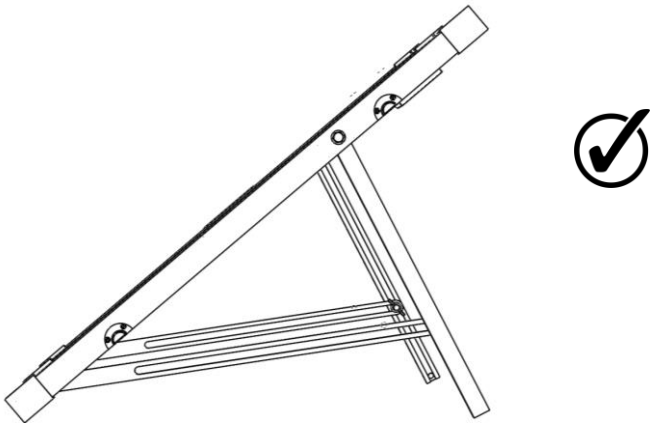

To maximize the output, adjust the angle of the suitcase regularly to track the sun's movement throughout the season

Summer
$\theta = Latitude - 15°$

Fall and Spring
$\theta = at\ latitude$

Winter
$\theta = Latitude + 15°$

Operation

After connecting the battery to the charge controller, the controller will turn on automatically. Assuming normal operation, the charge controller will cycle through different display. They are as follows:

Parameter	Display
PV Array Voltage	PV 0.0 V
Charging Current	PV 0.0 A
Generated Energy	PV 0.0 kWh
Battery Voltage	BATT 0.0 V
Battery SOC%	BATT 0.0 %
Temperature	BATT 0.0 F°

Use the following buttons to cycle through the menu and change parameters

SELECT	Cycles forwards through the different display screens.
ENTER	Cycles backwards through the different select screens & Customize some parameters on the charge controller

Programmable Parameters

Simply hold the "ENTER" button for approximately 5 seconds until the display flashes. Once flashing, then press "SELECT" until the desired parameter is reached and press "ENTER" one more time to lock in the parameter.

1. Generated Energy Interface

The user is able to reset the current power generation (kWh) back to 0 kWh.

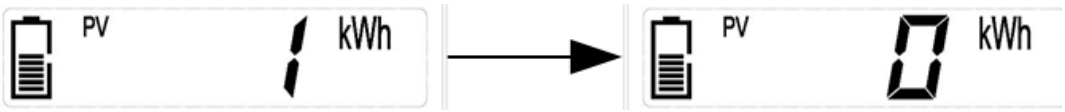

2. Battery Voltage Interface

In this interface, the user is able to select which type of battery is connected to the charge controller. Choose from Sealed, Gel, or Flooded batteries.

3. Battery Temperature Interface

The user can select between displaying battery temperature in Celsius or Fahrenheit.

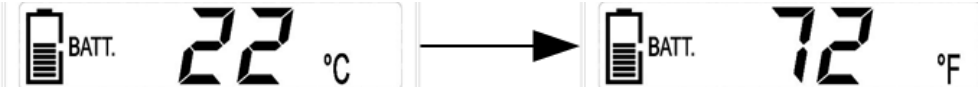

System Status Icons

Icon	Behavior
	**Constant:** System is normal, but it is not charging
	Charging: The bars will be sequencing indicating the system is charging.
	**Constant:** The battery is at full charge.
	Flashing: The battery is overvoltage.
	**Flashing:** The battery is under voltage.

System Status Troubleshooting

Indicator	Description	Troubleshoot
 **Flashing**	Battery over voltage	Use a multi-meter to check the voltage of the battery. Make sure the battery voltage is not exceeding the rated specification of the charge controller. Disconnect battery.
 **Flashing**	Battery under voltage	Use a multi-meter to verify the rated battery voltage. Disconnect any loads connected to the battery to allow it to charge.
Other Considerations		
Charge controller does not charge during daytime when the sun is shining on the solar panels.		Confirm that there is a tight and correct connection from the battery bank to the charge controller and the solar panels to the charge controller. Use a multi-meter to check if the polarity of the solar modules have been reversed on the charge controller's solar terminals.
Everything is connected correctly, but the LCD on the controller does not turn on		Check the rated battery voltage. The LCD will not display on the charge controller unless there is at least 9V coming from the battery bank.

Maintenance

For best controller performance, it is recommended that these tasks be performed from time to time.

1. Check that controller is mounted in a clean, dry, and ventilated area.
2. Check wiring going into the charge controller and make sure there is no wire damage or wear.
3. Tighten all terminals and inspect any loose, broken, or burnt up connections
4. Make sure readings in the LCD and LED are consistent.

Frequently Asked Questions

Q. Can the kit charge two or more 12V batteries connected in parallel?

A. Yes, it's possible if the batteries have the same type and capacity and are wired in parallel as a single 12V battery bank.

Q. Is there any risk that the solar kit will over charge my battery?

A. One of the functions of the solar charge controller is to ensure that your battery is not over charged; therefore there is no risk of overcharge.

Q. Can I extend the battery leads?

A. Yes, it's possible – please choose the same size of cable for extension. However, there longer the extension, the greater the line loss. Bigger gauge will be required for longer runs.

Q. Do I need to clean the solar panels?

A. Yes, it is recommended for better performance. Dust and dirt should first be swept off the panel surface using a soft brush. When the sweeping is complete, use a wet cloth to wipe the panel surface to remove remaining dirt and grime.

Q. Can rain damage the solar kit?

A. The solar panels are fully waterproof (IP66 class), the controller is not. We recommend protecting the kit from rain, since water into controller may damage the internal circuitry.

Technical Specifications

Solar Panel Parameters

Description	100 W Parameters	200 W Parameters
Maximum Power	100 W	200 W
Open Circuit Voltage (Voc)	21.6 V	21.2 V
Short Circuit Current (Isc)	6.10 A	12.12 A
Maximum Power Voltage (Vmp)	17.6 V	17.7 V
Maximum Power Current (Imp)	5.68 A	11.3 A
Cell Type	Monocrystalline	Monocrystalline
Operating Temperature	−40°F to +185°F	−40°F to +185°F
Folded Size	21.1 X 21.5 X 3.1 in	41.3 X 21.1 X 3.1 in
Net Weight	19.40 lbs.	33.60 lbs.

Charge Controller Parameters

Description	Parameter
Nominal Voltage	12 VDC
Rated Charge Current	30A
Max. PV Input Voltage	25 VDC
Equalization Voltage	Sealed: 14.6 V; Gel: None; Flooded: 14.8 V
Boost Voltage	Sealed: 14.4 V; Gel: 14.2 V; Flooded: 14.6 V
Float Voltage	13.8 V
Under Voltage	12 V
Self-consumption	≤13mA
Temperature Compensation Coefficient	-3mV/℃/2V
Operating Temperature	-25℃ to +55℃ | -13ºF to 131ºF
Storage Temperature	-35℃ to +80℃ | -31ºF to 176ºF
Enclosure	IP20
Terminals	Up to #4 AWG
Weight	0.6 lbs.

Battery Charging Parameters

Battery	GEL	SEALED	FLOODED
High Voltage Disconnect	16 V	16 V	16 V
Charging Limit Voltage	15.5 V	15.5 V	15.5 V
Over Voltage Reconnect	15 V	15 V	15 V
Equalization Voltage	-----	14.6 V	14.8 V
Boost Voltage	14.2 V	14.4 V	14.6 V
Float Voltage	13.8 V	13.8 V	13.2 V
Boost Return Voltage	13.2 V	13.2 V	13.2 V
Low Voltage Reconnect	12.6 V	12.6 V	12.6 V
Under Voltage Recover	12.2 V	12.2 V	12.2 V
Under Voltage Warning	12 V	12 V	12 V
Low Voltage Disconnect	11.1 V	11.1 V	11.1 V
Discharging Limit Voltage	10.8 V	10.8 V	10.8 V
Equalization Duration	-----	2 hours	2 hours
Boost Duration	2 hours	2 hours	2 hours

Charging Parameters Glossary

High Volt Disconnect—users can use the default parameters or assign a rated voltage value that the charge controller will operate. When and if the charge controller experiences a voltage higher than what is assigned, it will disconnect itself from the circuit; ceasing charge.

Charging Limit Voltage—depending on the batteries used, there might be a battery charging limit voltage that is recommended for the battery. This parameter ensures that the charge controller does not exceed the default or assigned rated charging limit voltage. This is usually put into play to optimize and extend the life of the battery. Relatively speaking, the higher the charging voltage then there is a correlation for reduced battery efficiency. (Likewise the lower the discharge voltage affects battery efficiency.

Over-voltage Reconnect—In the event a charge controller experiences an over-voltage condition set by the previous two parameters, then this reconnecting parameter is put into play to direct the controller when it can connect and safely charge again. Typically over-voltage reconnection is achieved when time has passed (ex. The sun setting), or when the over-voltage condition is remedied ultimately reducing the voltage to a user defined charging voltage.

Equalization Voltage—equalization voltage is a corrective over-charge of the battery. The user should consult their battery manufacturer regarding specific battery equalization capacity. This parameter sets the equalization voltage to set the battery at when it reaches the equalization state.

Boost Voltage—users should check with their battery manufacturer for proper charging parameters. In this stage, users set the boost voltage where the battery will reach a voltage level and remain there until the battery undergoes an absorption stage

Float Voltage—once the charge controller recognizes the set float voltage, it will commence floating. The battery is supposed to be fully charged in his state, and the charge current is reduced to maintain battery stability levels.

Boost Return Voltage—if at any point, the battery voltage levels registers to be below the boost return voltage for an extended period amount of time, then the charge controller will commence the boost stage once again.
Low Voltage Reconnect—this parameter allows loads connected to the system will be able to operate (not fully) again.

Under-voltage Recover—deals with the loads connected to the system. When batteries are determined to be low due to them approaching low voltage disconnect, then the loads will be shut off to give the batteries time to recover. This parameter sets the controller to shut off the loads until it can reach the low voltage reconnect stage.

Under-voltage Warning—this parameter deals with the batteries themselves approaching the under-voltage recovery state. The user should minimize loads before the charge controller approaches a level where it will do this automatically to protect the battery from discharging

Low-voltage disconnect—prevents over-discharge of the batteries by automatically disconnecting any loads. This extends battery life and is the precedent to being in an under voltage state, recovering from the under voltage state, and finally reconnecting to normal operational state.

Discharging limit Voltage—the user can set the “discharge” limit of a battery if they choose to better protect the battery and expand its life. The following chart serves as an example of voltages and their state of charges. Note that the higher the charging limit and lower the discharge limit correlates with overall low battery life.

State of Charge	12 V Battery	Volts per Cell
100%	12.7	2.12
90%	12.5	2.08
80%	12.42	2.07
70%	12.32	2.05
60%	12.20	2.03
50%	12.06	2.01
40%	11.9	1.98
30%	11.75	1.96
20%	11.58	1.93
10%	11.31	1.89
0	10.5	1.75

Dimensions

Adventurer

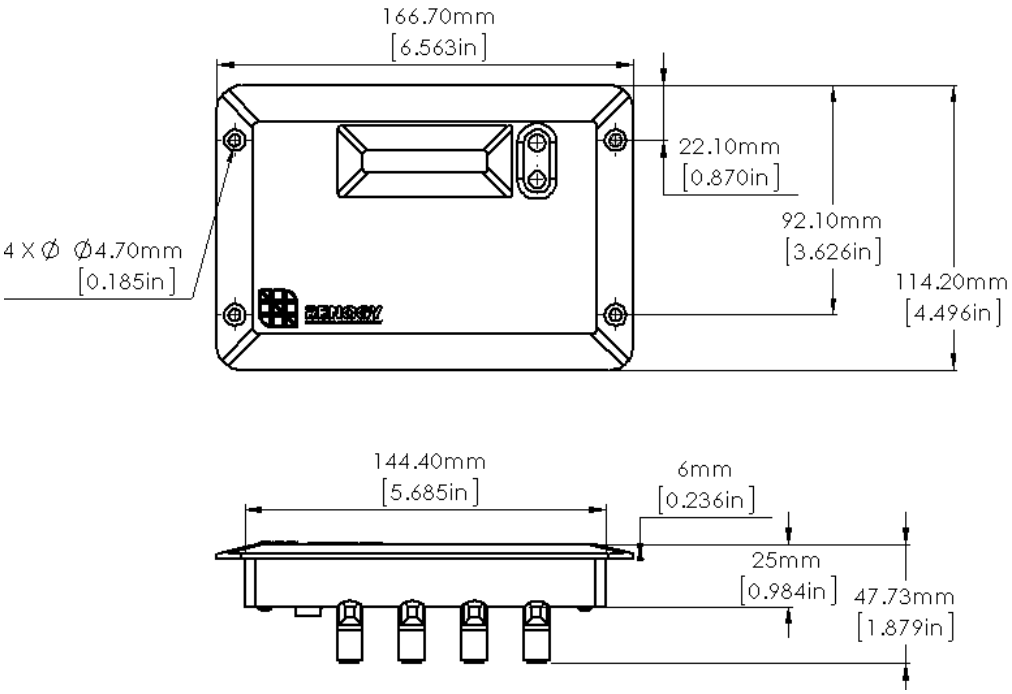

100W Eclipse Suitcase

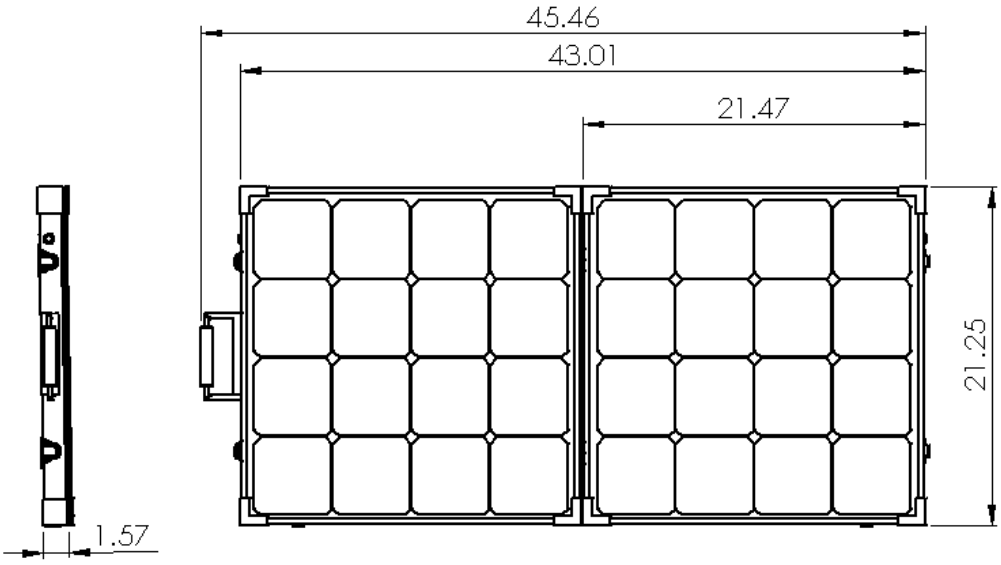

200W Eclipse Suitcase